DRAWING NO.
DCAJ432

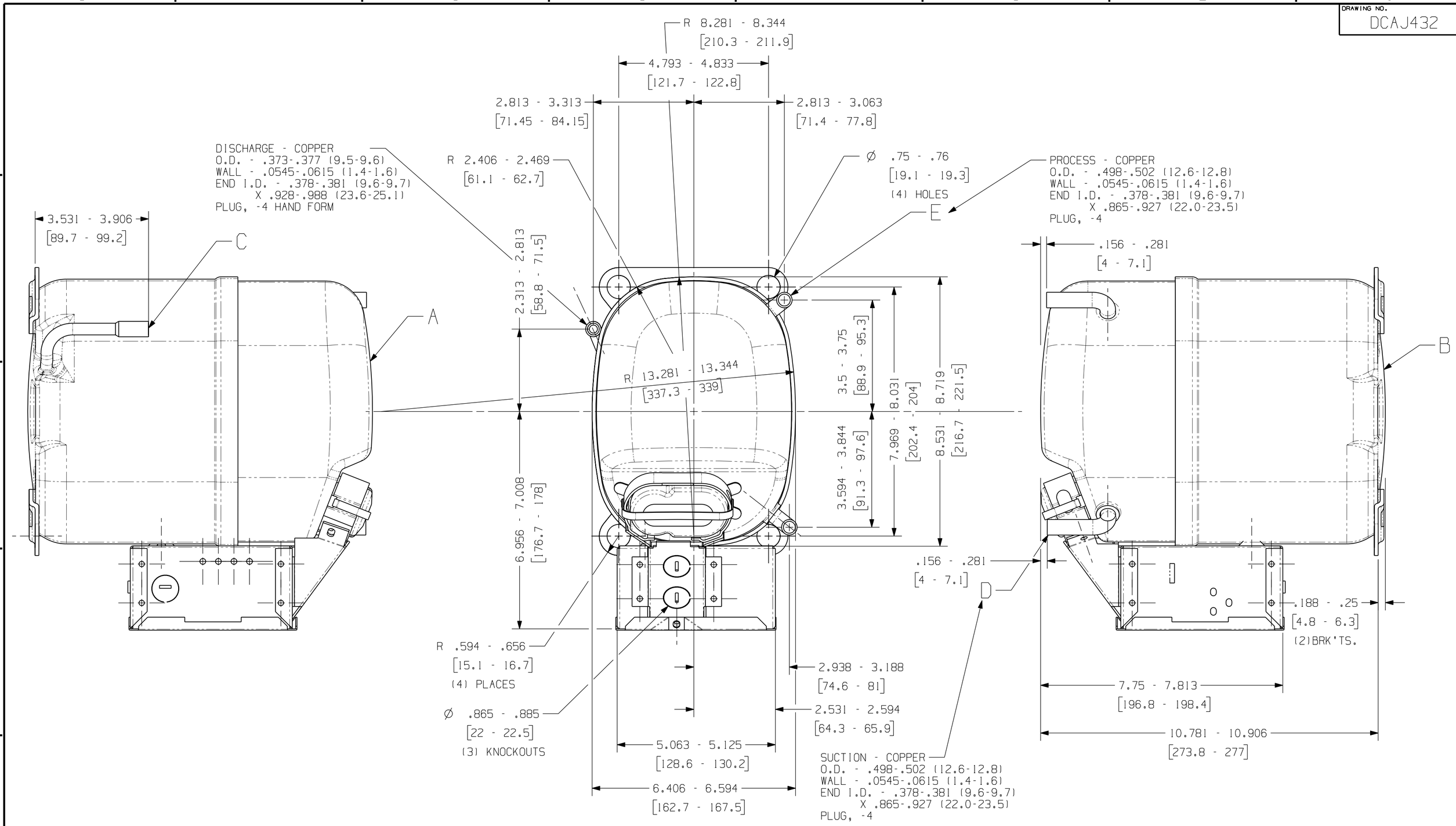

DIMENSIONING = INCHES / MILLIMETERS OR INCHES (MILLIMETERS)

NOTE!
1. SEE DWG. #AHT1 FOR ASSEMBLY OF DISCHARGE CONNECTOR AND LOWER SHOCK LOOP IN LOWER HOUSING.

NOTE!
1. IF SPECIFIED ON BILL OF MATERIAL ASSEMBLE THESE PARTS AS SHOWN.
2. SEE SPEC. "A-B" & "A-C" FOR PROCESSING.

ENGLISH

Q.A. SYMBOLS
☆ = CATEGORY I
△ = CATEGORY II
□ = CATEGORY III
= CATEGORY IV

AJ

A	HA635-11		T.M.G 21APR06		
B	HA705-01		#244623-000 B WAS HA634	MODEL & REDRAWN	
C	34366-2			#228363	
D	34372				
E	34372				
			6A	--	
			A	REL	
			LT	LC	CHANGE

DATE

THIS DRAWING OR PRINT (I) IS THE PROPERTY OF TECUMSEH PRODUCTS COMPANY AND CONTAINS PROPRIETARY AND CONFIDENTIAL INFORMATION OF TECUMSEH. IT IS MADE AVAILABLE TO THE RECIPIENT ON THE EXPRESS AND IMPLIED CONDITION THAT NEITHER IT NOR THE INFORMATION CONTAINED THEREIN WILL BE DUPLICATED, USED OR DISCLOSED OR MADE AVAILABLE TO OTHERS WITHOUT THE EXPRESS AND SPECIFIC WRITTEN CONSENT OF TECUMSEH AND THAT SUCH INFORMATION AND DOCUMENTS WILL BE RETURNED APPROVED EXPRESSLY IN WRITING BY TECUMSEH, AND NOT OTHERWISE, (II) SHALL NOT BE USED IN ANY MANNER IN ANY MANNER OR TO ANY EXTENT WITHOUT SPECIFIC WRITTEN CONSENT AND (IV) SHALL BE RETURNED BY THE RECIPIENT LATTER'S REQUEST PROMPTLY AFTER SUCH REQUEST IS MADE.

DIS.CODE

DO NOT SCALE THIS DRAWING. ALL FERROUS MATERIALS MUST NOT BE MAGNETIZED AS DETERMINED BY A COMPRESSOR ASSEMBLY.

NAME: SALES COMPRESSOR

DWN.	CK.	APR.	SCALE
BRODERICK 9/8/93	ON FILE	ON FILE	1:1 & NOTED

THIS PRINT SUPERSEDES ALL PRINTS PRIOR TO

TECUMSEH PRODUCTS CO.
TECUMSEH, MICHIGAN

MATERIAL: NOTED

DRAWING No. MD888-08

REVISION LEVEL: REL

DRAWING NO. DCAJ432

BANNER
User: tgrifith Part/Rev: aj-dcaj432_a-c.prt Date: 03-May-06 Time: 10:34